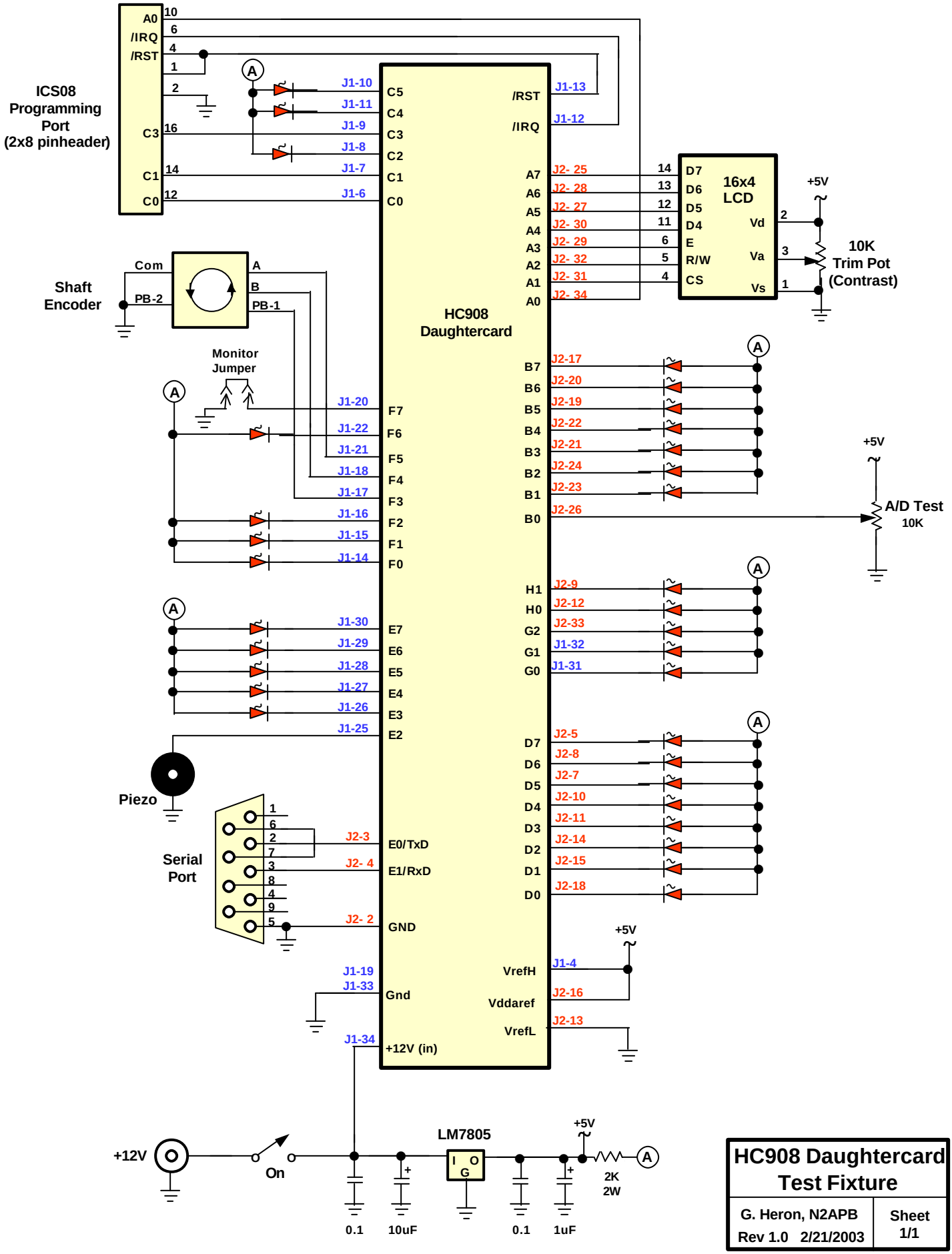


| HC908 Daughtercard Test Fixture | |
|---|---|
| G. Heron, N2APB<br>Rev 1.0 2/21/2003 | Sheet<br>1/1 |