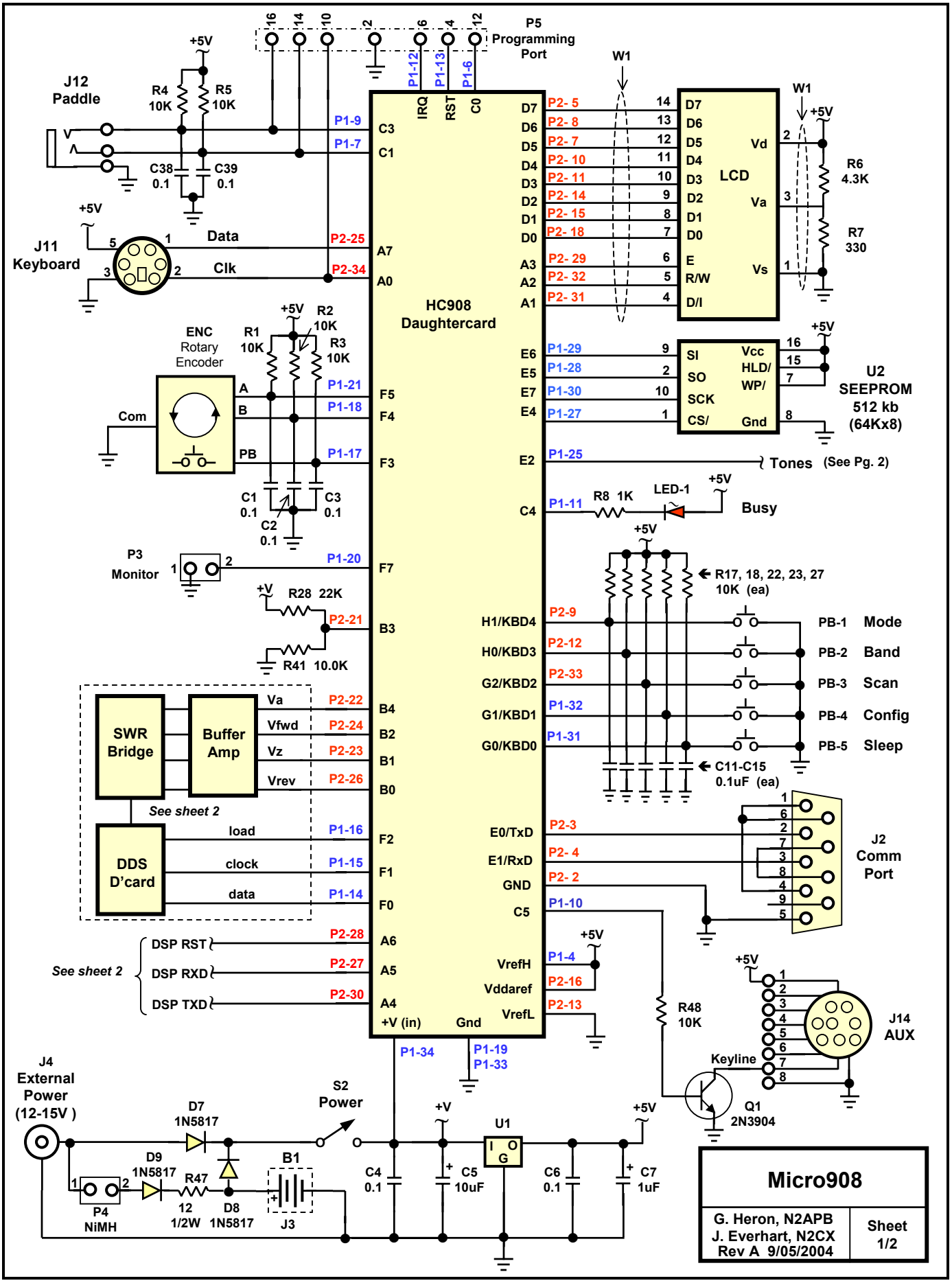
P5
Programming
Port
16
14
10
2
6
4
12
P1-12
P1-13
P1-6
IRQ
RST
C0
+5V
J12
Paddle
R4
10K
R5
10K
C38
0.1
C39
0.1
P1-9
P1-7
C3
C1
J11
Keyboard
Data
Clk
P2-25
P2-34
A7
A0
HC908
Daughtercard
ENC
Rotary
Encoder
R1
10K
R2
10K
R3
10K
Com
A
B
PB
P1-21
P1-18
P1-17
F5
F4
F3
C1
0.1
C2
0.1
C3
0.1
P3
Monitor
P1-20
F7
+V
R28 22K
P2-21
B3
R41 10.0K
SWR
Bridge
Buffer
Amp
Va
Vfwd
Vz
Vrev
P2-22
P2-24
P2-23
P2-26
B4
B2
B1
B0
See sheet 2
DDS
D'card
load
clock
data
P1-16
P1-15
P1-14
F2
F1
F0
See sheet 2
DSP RST
DSP RXD
DSP TXD
P2-28
P2-27
P2-30
A6
A5
A4
+V (in)
Gnd
P1-34
P1-19
P1-33
D7
D6
D5
D4
D3
D2
D1
D0
A3
A2
A1
P2- 5
P2- 8
P2- 7
P2- 10
P2- 11
P2- 14
P2- 15
P2- 18
P2- 29
P2- 32
P2- 31
W1
LCD
D7
D6
D5
D4
D3
D2
D1
D0
E
R/W
D/I
Vd
Va
Vs
R6
4.3K
R7
330
E6
E5
E7
E4
P1-29
P1-28
P1-30
P1-27
SI
SO
SCK
CS/
Vcc
HLD/
WP/
Gnd
U2
SEEPROM
512 kb
(64Kx8)
E2
P1-25
Tones
(See Pg. 2)
C4
P1-11
R8 1K
LED-1
Busy
R17, 18, 22, 23, 27
10K (ea)
H1/KBD4
H0/KBD3
G2/KBD2
G1/KBD1
G0/KBD0
P2-9
P2-12
P2-33
P1-32
P1-31
PB-1 Mode
PB-2 Band
PB-3 Scan
PB-4 Config
PB-5 Sleep
C11-C15
0.1uF (ea)
E0/TxD
E1/RxD
GND
C5
P2-3
P2- 4
P2- 2
P1-10
J2
Comm
Port
VrefH
Vddaref
VrefL
P1-4
P2-16
P2-13
R48
10K
J14
AUX
Keyline
Q1
2N3904
J4
External
Power
(12-15V)
D7
1N5817
D9
1N5817
R47
12
1/2W
D8
1N5817
P4
NiMH
B1
J3
S2
Power
C4
0.1
C5
10uF
U1
C6
0.1
C7
1uF
Micro908
G. Heron, N2APB
J. Everhart, N2CX
Rev A 9/05/2004
Sheet
1/2

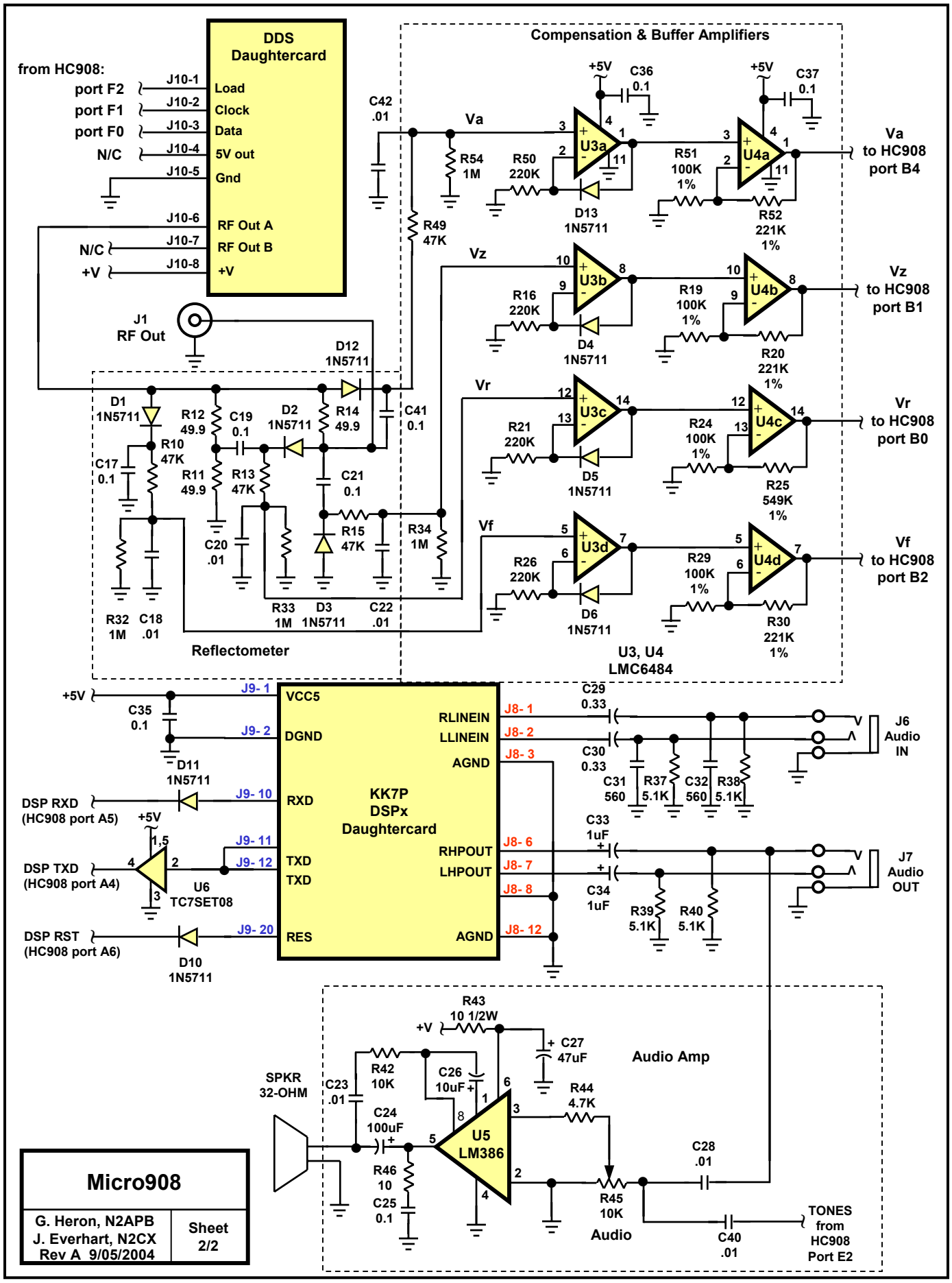
DDS Daughtercard
from HC908:
port F2
port F1
port F0
N/C
J10-1 Load
J10-2 Clock
J10-3 Data
J10-4 5V out
J10-5 Gnd
J10-6 RF Out A
J10-7 RF Out B
J10-8 +V
N/C
+V
J1 RF Out
Compensation & Buffer Amplifiers
Va
Vz
Vr
Vf
U3a
U3b
U3c
U3d
U4a
U4b
U4c
U4d
D13 1N5711
D4 1N5711
D5 1N5711
D6 1N5711
R50 220K
R51 100K 1%
R52 221K 1%
R16 220K
R19 100K 1%
R20 221K 1%
R21 220K
R24 100K 1%
R25 549K 1%
R26 220K
R29 100K 1%
R30 221K 1%
C36 0.1
C37 0.1
C42 .01
R54 1M
R49 47K
Va to HC908 port B4
Vz to HC908 port B1
Vr to HC908 port B0
Vf to HC908 port B2
D12 1N5711
D1 1N5711
D2 1N5711
D3 1N5711
R12 49.9
R14 49.9
R10 47K
R11 49.9
R13 47K
R15 47K
R32 1M
R33 1M
R34 1M
C17 0.1
C18 .01
C19 0.1
C20 .01
C21 0.1
C22 .01
C41 0.1
Reflectometer
U3, U4 LMC6484
KK7P DSPx Daughtercard
VCC5
DGND
RXD
TXD
TXD
RES
RLINEIN
LLINEIN
AGND
RHPOUT
LHPOUT
AGND
J9-1
J9-2
J9-10
J9-11
J9-12
J9-20
J8-1
J8-2
J8-3
J8-6
J8-7
J8-8
J8-12
+5V
C35 0.1
D11 1N5711
DSP RXD (HC908 port A5)
DSP TXD (HC908 port A4)
DSP RST (HC908 port A6)
U6 TC7SET08
D10 1N5711
C29 0.33
C30 0.33
C31 560
R37 5.1K
C32 560
R38 5.1K
J6 Audio IN
C33 1uF
C34 1uF
R39 5.1K
R40 5.1K
J7 Audio OUT
Audio Amp
R43 10 1/2W
C27 47uF
R42 10K
C26 10uF
C23 .01
C24 100uF
R46 10
C25 0.1
SPKR 32-OHM
U5 LM386
R44 4.7K
R45 10K
Audio
C28 .01
C40 .01
TONES from HC908 Port E2
Micro908
G. Heron, N2APB
J. Everhart, N2CX
Rev A 9/05/2004
Sheet 2/2